Parker Print Surf (PPS)
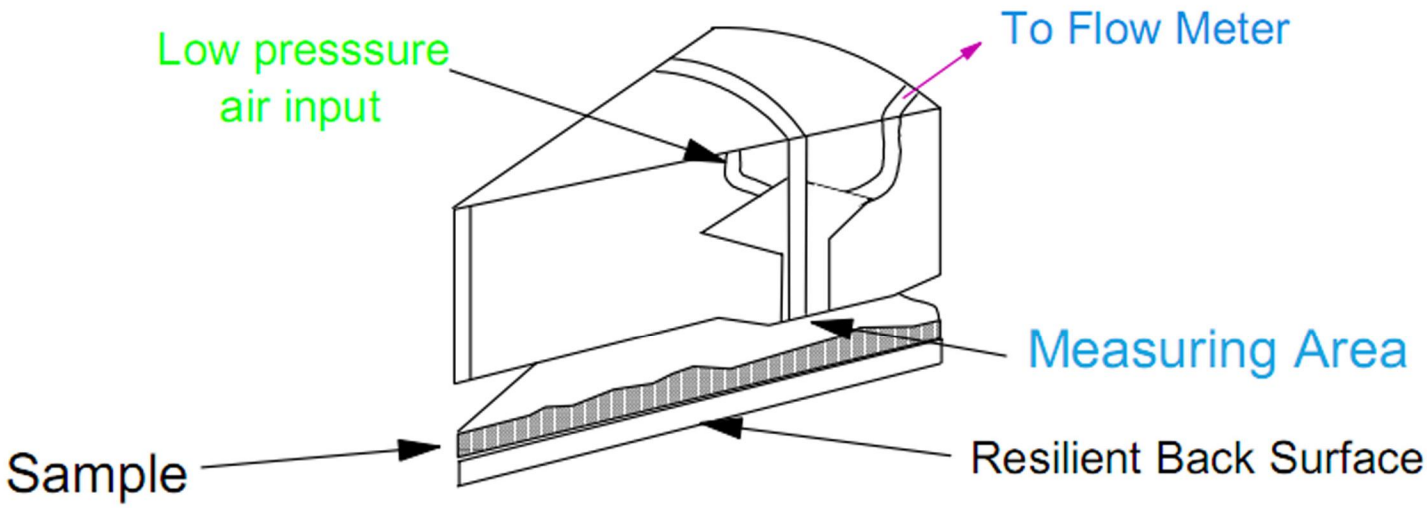
PPS is an air leak smoothness test that responds to relatively small imperfections in the coated surface. A smoother surface results in a lower PPS value. The test device can apply several levels of pressure, with less pressure used for smoother surfaces.